The use or communication of the contents there of are forbidden without express authority.(당사의 사전 허락없이 무단 전재 및 복사를 금함)

NO	REVISION RECORD	DATE	CHK.	APPR.

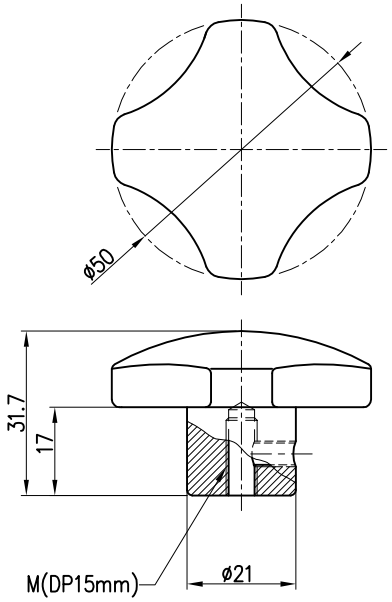

CA-1043 / NUT TYPE

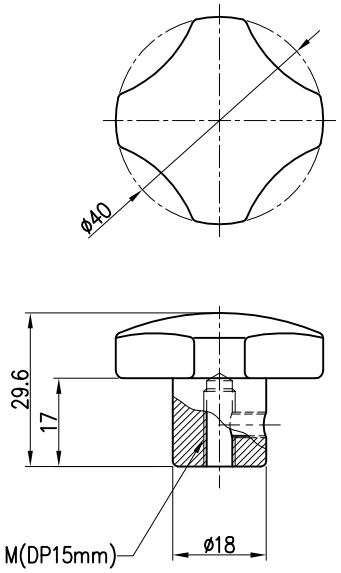

CA-1043M / NUT TYPE

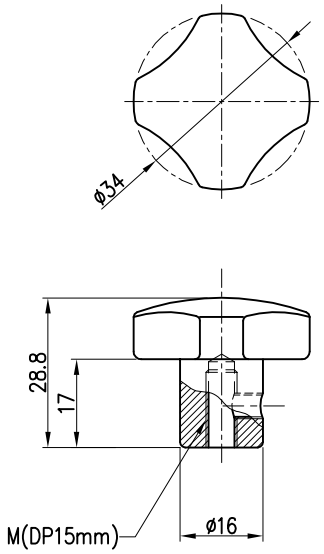

CA-1043S / NUT TYPE

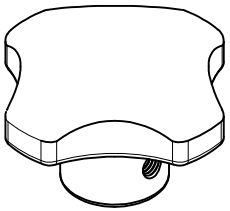

TYPE	규격	제품명	M	Tap Depth (mm)
NUT	1043 (ø50)	CA-1043-1N	M6	DP 15mm
		CA-1043-2N	M8	
		CA-1043-3N	M10	
		CA-1043-4N	M12	
	1043M (ø40)	CA-1043M-1N	M6	
		CA-1043M-2N	M8	
		CA-1043M-3N	M10	
	1043S (ø34)	CA-1043S-1N	M6	
		CA-1043S-2N	M8	

TOLERANCE(mm) (KS B 0412에 준함)	
6 이하	±0.05
6 ~ 30	±0.1
30 ~ 120	±0.15
120 ~ 315	±0.2
300 ~ 1000	±0.3
1000 ~ 2000	±0.5

Note

1. 특징 :
2. 용도 :

FINISH	MATERIAL	UNIT	mm	NO.	DESCRIPTION	DWG. NO	QTY	REMARK
도금 : 광택연마 도장 : -	STS304 CASTING	APP.		S,H,KIM	DWG. NO.	-		V1.0
		DWG.	2018.10.10	S,H,OH	PART NAME	-		
QTY	Hardware			1/1	ASS'Y NAME	스텐 사각노브(NUT Type)		
1 EA/SET				A3	MODEL NO.	CA-1043/NUT		