Dwg. No.

Re. No.	DESCRIPTION	DATE	DS.	CH.	AP.
1					
2					
3					

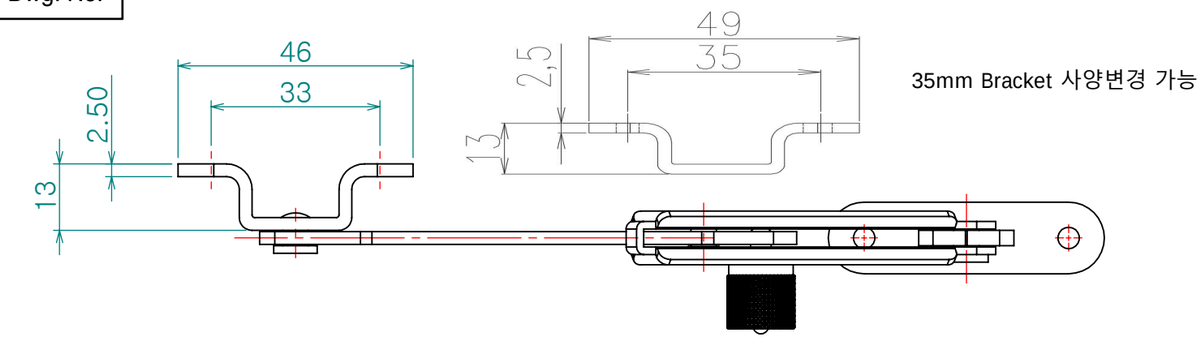

CE- 003-R

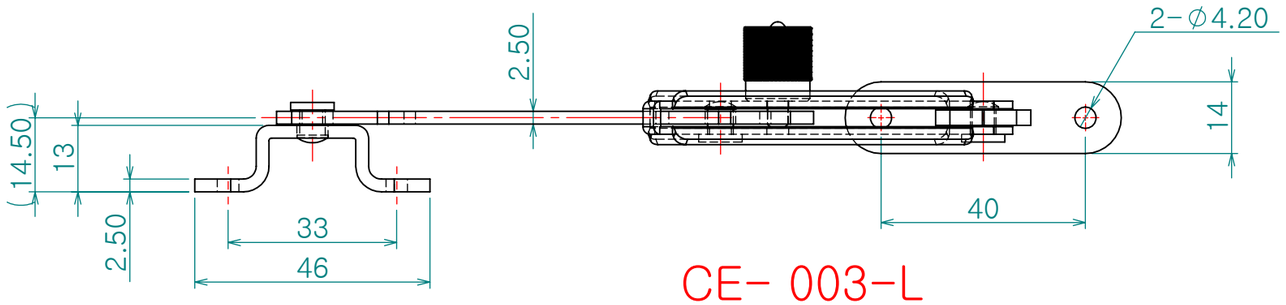

CE- 003-L

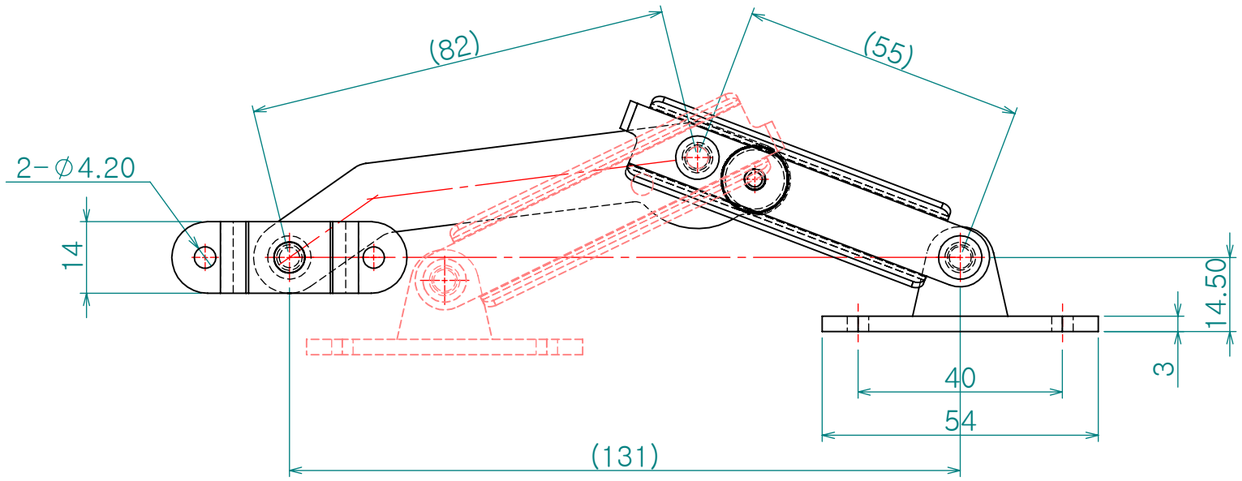

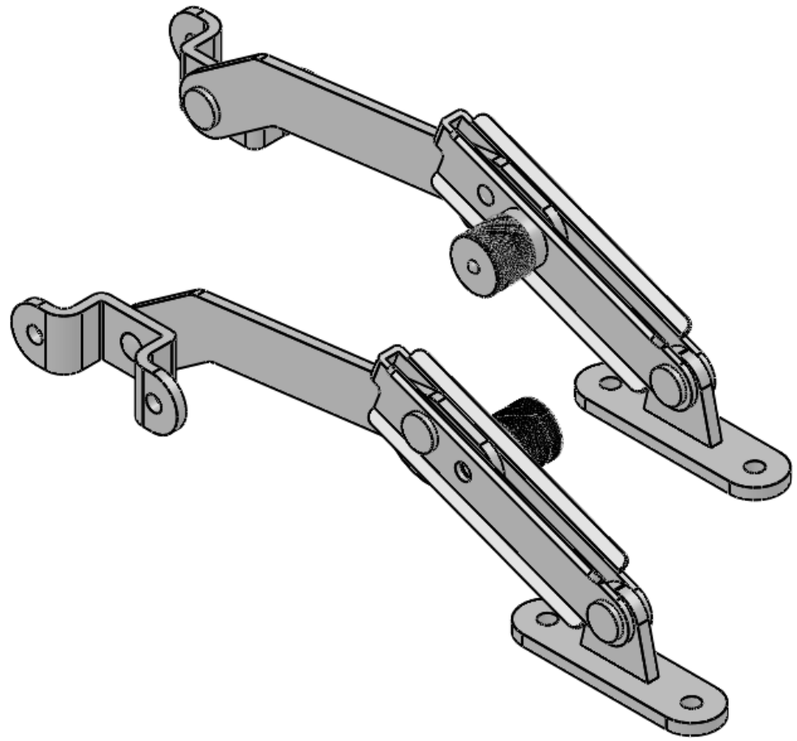

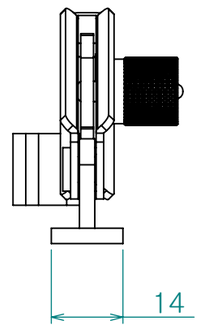

Note

1. 특징 :

2. 용도 :

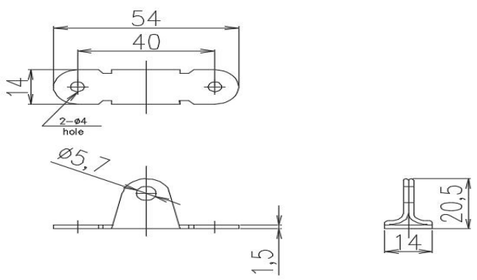

Press

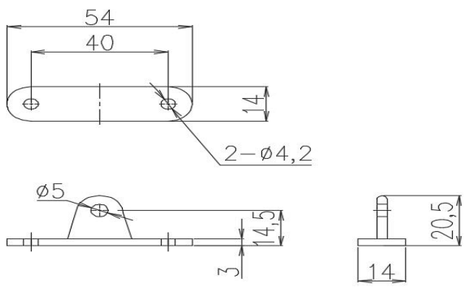

Casting

Dimension (mm)	Precision
0.5~3	
3~6	±0.05
6~30	±0.1
30~120	±0.15
120~315	±0.2
315~1000	±0.3
1000~2000	±0.5
KS B 0412에 준함	

Material STS304		Dwg. No.	Q'TY **
Finish 바렐연마		Part Name. 노브타입 스테이	Weight -
Revision -	Sheet Size A3	Ass'y Name **	Scale 1:1.2
Date 2010-07-08	Designed by Shin S H	Model No. CE- 003-L,R	
Checked by	Approved by	Hardware	