**	Dwg. No.

Re. No.	DESCRIPTION	DATE	DS.	CH.	AP.
1					
2					
3					

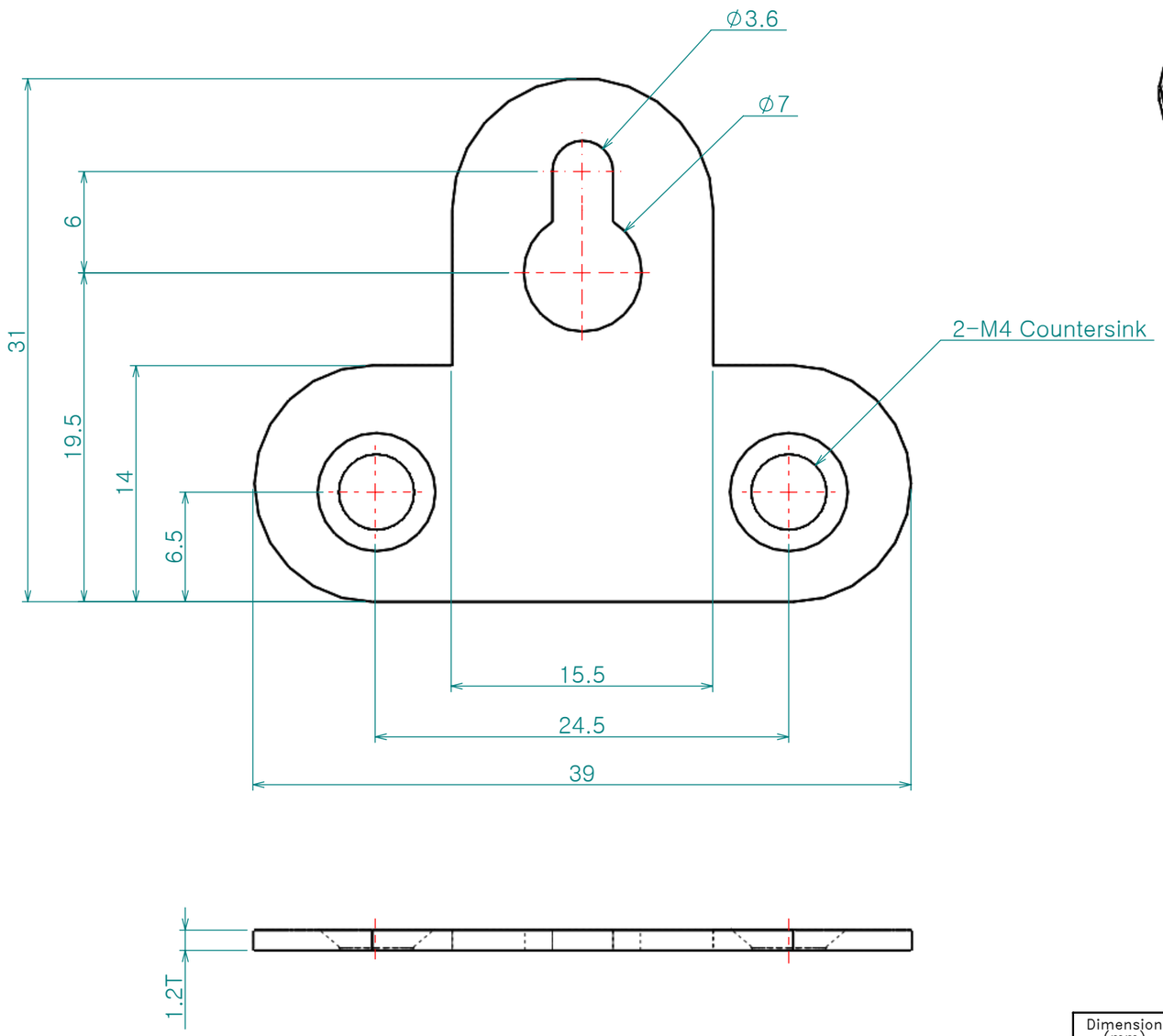

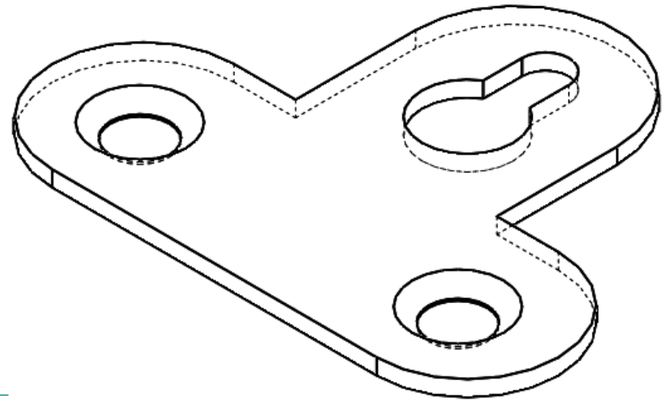

Dimension (mm)	Precision
0.5~3	
3~6	±0.05
6~30	±0.1
30~120	±0.15
120~315	±0.2
315~1000	±0.3
1000~2000	±0.5
KS B 0412에 준함	

Material: STEEL		Dwg. No.: **	Q'TY: *EA
Finish: 신주도금		Part Name.: **	Weight: -
Revision: -	Sheet Size: A3	Ass'y Name: **	Scale: 3:1
Date: 2018-05-18	Designed by: Shin S H	Model No.: T자 경고리	
Checked by	Approved by	Hardware	